HOOVER®

SteamVac™

Widepath™

The Easy to Use Deep Cleaner

Congratulations on your purchase

SteamVac™ Widepath cleaners have 6 rotating brushes that deep clean carpets and scrub bare floors!

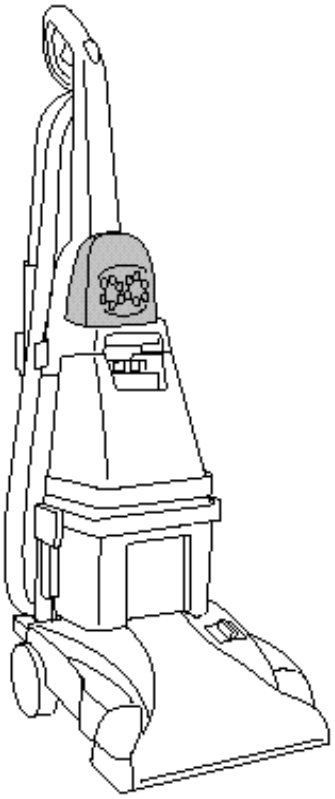

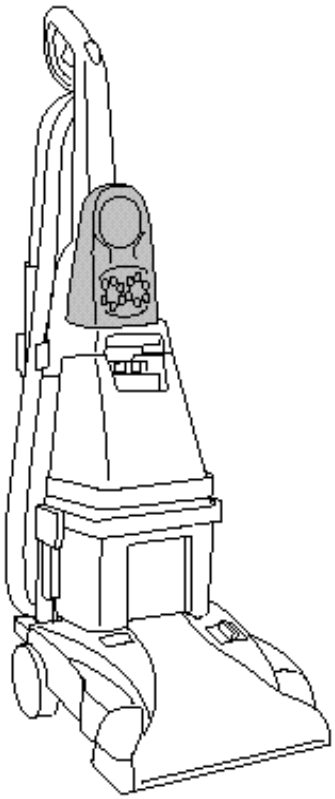

LS MODEL

SteamVac™ Widepath Deep Cleaner cleans carpet fibers by applying hot tap water and cleaning solution.

www.hoover.com

Fill in and Retain

This HOOVER deep cleaner is designed for deep cleaning carpet, rugs, carpeted stairs and upholstery. The model and serial numbers are located on the data label on the back of the handle.

For your personal records, please enter the COMPLETE model and serial numbers in the spaces provided and retain this information.

Your deep cleaner is model

_____

and has serial number

_____

It is suggested that you attach your sales receipt to this owner s manual.

Verification of date of purchase may be required for warranty service of your Hoover product.

Index

Important safeguards 2
Assembly 4-5
Carton contents. 3
How to use. 6-8
Agitator speed selector 7
Automatic "shut-off" 7
Deep cleaner description 6
Emptying the recovery tank 8
Filling the clean solution tank . 7-8
How to clean
After cleaning 9
Before you begin 9
Carpet cleaning 10
Cleaning bare floors 10-11
Clean Surge™ Feature 10
Picking up spills 10
Using the tools 11
Attaching tools 11
Cleaning carpeted stairs. 12
Cleaning upholstery 13
Scrub module 11
Maintenance
Headlight replacement 13
If you have a problem 14
Lubrication 14
Service 15
Storage 14
Warranty 15

© 1993,1999,2001 The Hoover Company

www.hoover.com

Owner's Manual

ENGLISH ➜ pp. 1-15
ESPAÑOL ➜ pág. 16-25
FRANÇAIS ➜ p. 26-34

Review this manual before operating deep cleaner

Important Safeguards!

When using an electrical appliance, always follow basic precaution, including the following:

READ ALL INSTRUCTIONS BEFORE USING APPLI-

WARNING:

To reduce the risk of fire, electric shock, or injury:

- **Use indoors only.**
- **Use only on surfaces moistened by the cleaning process or small spills. Do not immerse product.**
- **Connect to a properly grounded outlet only. See "Grounding Instructions".**
- **Do not clean over floor electrical outlets.**
- **Do not use without tanks in place.**
- **Use extra care when cleaning on stairs. Do not place deep cleaner on stairs.**
- **Use deep cleaner only for its intended use as described in the instructions.**
- **Use only attachments recommended by The Hoover Company; others may cause hazards.**
- **The use of an extension cord is not recommended. If an extension cord is absolutely necessary, use at least a 16 gauge 3-wire cord which has a 3-prong grounding type plug and a 3-pole receptacle that accepts the machine plug.**
- **Unplug deep cleaner when not in use. Turn off all controls before unplugging.**
- **Unplug before connecting the powered hand tool.**
- **Always disconnect cord from electrical outlet before servicing the deep cleaner.**
- **Do not unplug by pulling on cord. To unplug, grasp the plug, not the cord.**
- **Never handle plug or appliance with wet hands.**
- **Do not pull or carry by cord, use cord as a handle, close door on cord or pull cord around sharp edges or corners. Do not run appliance over cord. Keep cord away from heated surfaces.**
- **Do not use with damaged cord or plug. If appliance is not working as it should, has been dropped, damaged, left outdoors, or dropped into water, take it to a Hoover Factory Service Center or Authorized Hoover Warranty Service Dealer.**
- **Close supervision is necessary when any appliance is used by or near children. Do not allow deep cleaner to be used as a toy or to run unattended at any time.**
- **Do not point tools toward people or pets.**
- **Use only commercially available floor cleaners intended for machine application. Do not use any type of wax with deep cleaner.**
- **To assist In reducing drying time, be certain the area is well ventilated when using detergents and other cleaners with this machine.**
- **Keep detergents and other cleaners out of children's reach.**
- **Do not use to pick up flammable or combustible liquids such as gasoline or use in areas where they may be present.**
- **Do not pick up chlorine bleach, drain cleaner, gasoline or any other toxic material with this appliance.**
- **Do not pick up anything that is burning or smoking, such as cigarettes, matches, or hot ashes.**
- **Avoid picking up hard, sharp objects with the deep cleaner. They may damage the machine.**
- **Keep hair, loose clothing, fingers, feet and all parts of body away from openings and moving parts.**
- **Do not put any object into openings. Do not use with any opening blocked; keep free of dust, lint, hair, and anything that may reduce air flow.**
- **To help prevent matting and resoiling, avoid contact with carpets until they are dry. Keep children and pets away from carpets until they are completely dry.**
- **Store in a dry place. Do not expose machine to freezing temperatures.**

Save these instructions!

Grounding Instructions

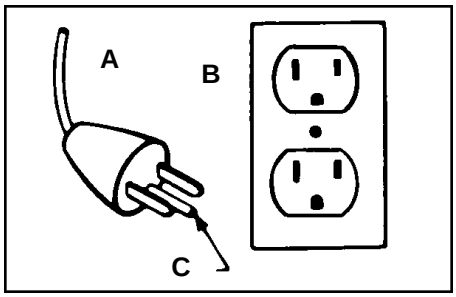

This appliance must be grounded. If it should malfunction or breakdown, grounding provides a path of least resistance for electrical current to reduce the risk of electric shock. This appliance is equipped with a cord having an equipment-grounding conductor (C) and grounding plug (A). The plug must be plugged into an appropriate outlet (B) that is properly installed and grounded in accordance with all local codes and ordinances.

DANGER-

Improper connection of the equipment-grounding conductor can result in the risk of electric shock. Check with a qualified electrician or service person if you are in doubt as to whether the outlet is properly grounded. Do not modify the plug provided with the appliance - if it will not fit the outlet, have a proper outlet installed by a qualified electrician. This appliance is for use on a nominal 120 volt circuit and has a grounding plug that looks like the plug illustrated in sketch (A).

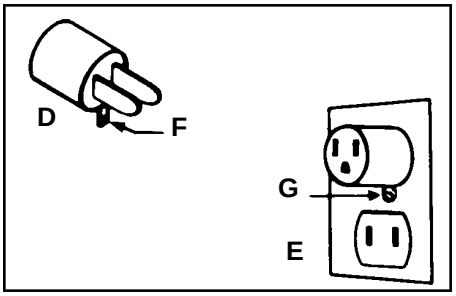

A temporary adapter (D) may be used to connect this plug to a 2-pole receptacle (E) if a properly grounded outlet is not available. The temporary adapter should be used only until a properly grounded outlet (B) can be installed by a qualified electrician. The green colored rigid ear, lug, or the like (F) extending from the adapter must be connected to a permanent ground (G) such as a properly grounded outlet box cover. Whenever the adapter is used, it must be held in place by a metal screw. **NOTE**: In Canada, the use of a temporary adapter is not permitted by the Canadian Electrical Code.

1. Assembly

Carton contents

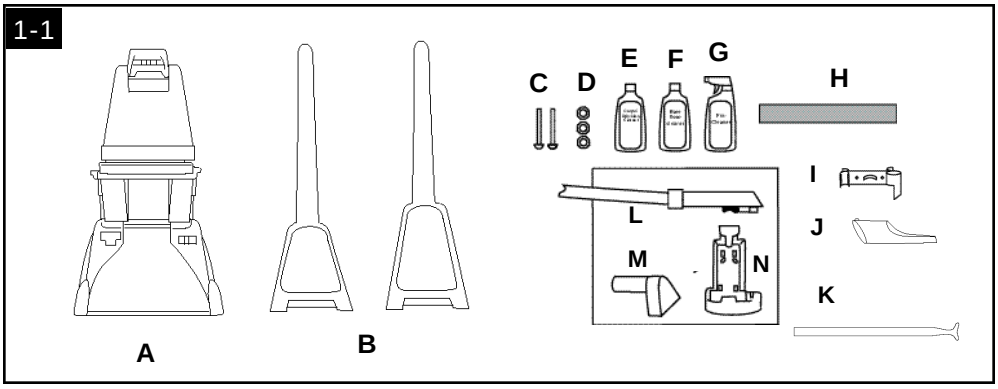

Unpack deep cleaner from the carton and identify the parts shown. Remove and dispose of the packing.

A. Deep cleaner
B. Upper handle with powered hand tool OR Upper handle with powered hand tool and scrub module*
C. Bolts (2)
D. Nuts (3 - one extra included)
E. Carpet/Upholstery Detergent (some have 2 bottles)
F. Bare Floor Cleaner*
G. PreCleaner Spray*
H. Bare floor attachment*
I. Hose holder
J. Crevice tool*
K. Nozzle cleanout-tool*

Contained in carton with hose:
L. Hose
M. Stair/upholstery nozzle
N. Tool holder and screw (taped on rack under nozzle)
***Included with some models**

The assembled cleaner will look like this drawing (LS model shown).

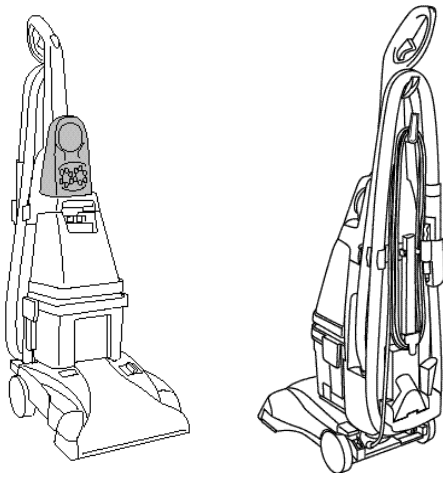

Assemble handle

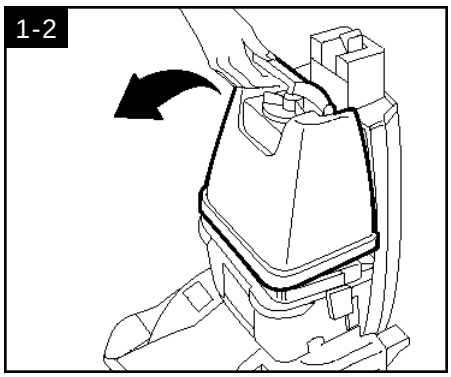

Attach upper handle

Remove clean solution tank (upper tank) from deep cleaner.

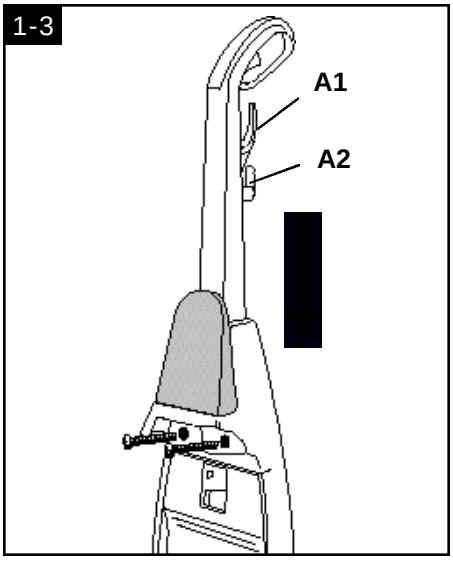

With hose hook (A1) and cord hook (A2) to back of deep cleaner, push upper handle down onto lower handle. Push **bolts** into holes on **front of handle. If bolts will not go through hole easily handle is not pushed completely down.**

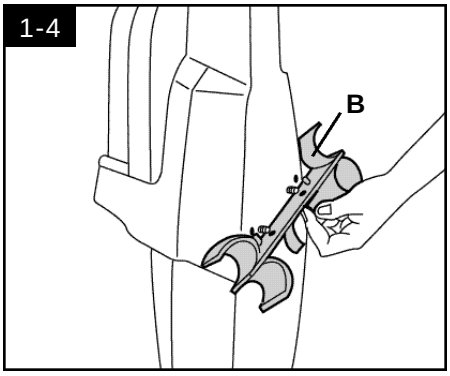

Attach hose holder

Position hose holder (B) onto handle by matching tabs on rack with openings on back of handle. Make sure holes for bolts are aligned.

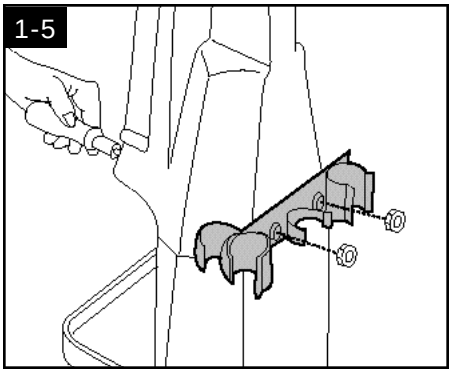

Place **nuts** in recessed areas on **back of handle.** Hold each nut in place while tightening each bolt securely (from the front of the handle) with a Phillips screw driver.

Only two nuts are needed on this model. The extra nut is not required but has been provided for your convenience.

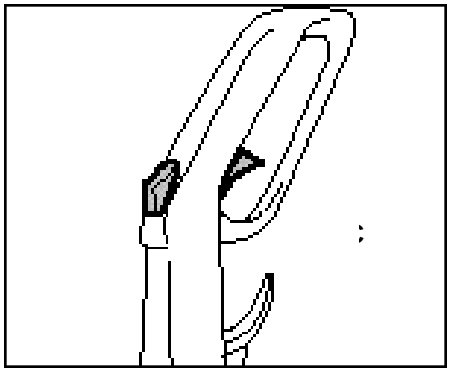

When handle sections are completely together, squeeze trigger (C) and depress Clean Surge™ Button* (D) on upper handle.

You will hear a "snap"when the trigger rod is in place.

*some models

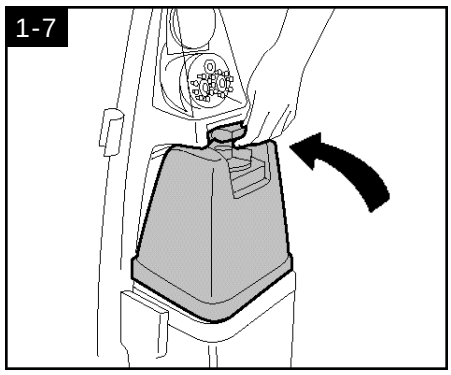

Replace clean solution tank (upper tank) by positioning bottom first. Press on tank handle to snap top of tank into place.

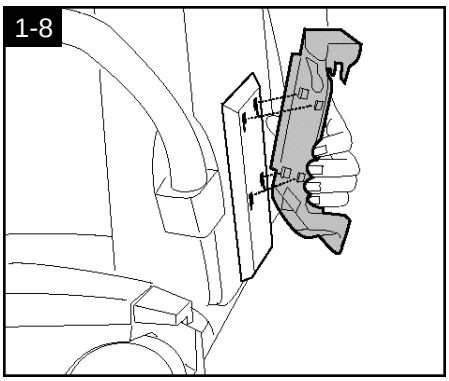

Attach tool holder

Remove tool and taped screw from holder.

Insert projections on holder into slots on back of cleaner.

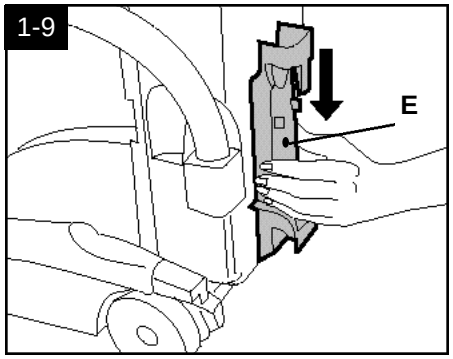

Slide rack down into place. Insert screw at (E) and tighten with a Phillips screwdriver.

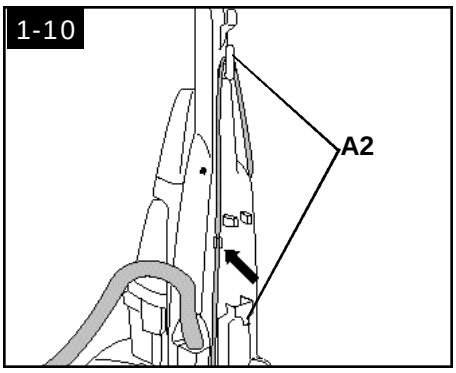

Press cord into cord clip on back of handle. Pull cord tight and wrap cord around hooks (A2).

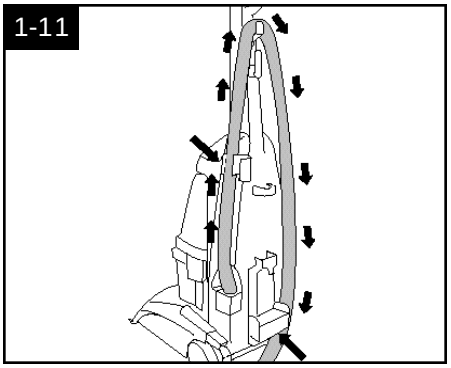

Storing hose & tools

Store hose on holder by first positioning hose in front section of clip.

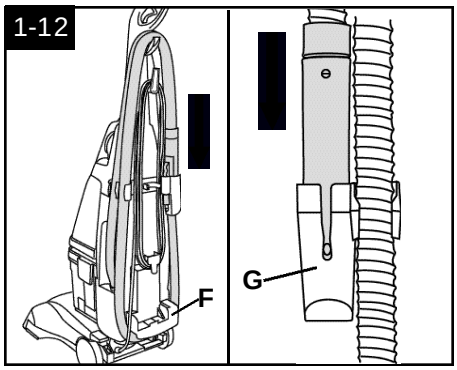

Continue wrapping hose under lower hook (F). Snap hose end **fully** into holder (G).
Ensure that the hose end is pushed down completely into holder (G).

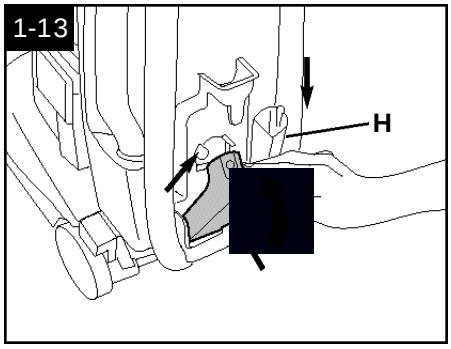

Slide crevice tool (H) into holder (some models only).

Position stair/upholstery nozzle in holder at base of cleaner and snap it into place as shown at arrow.

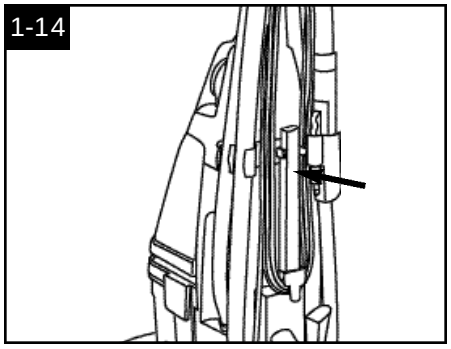

Insert end of bare floor attachment (some models only) into holder and snap into clip as shown.

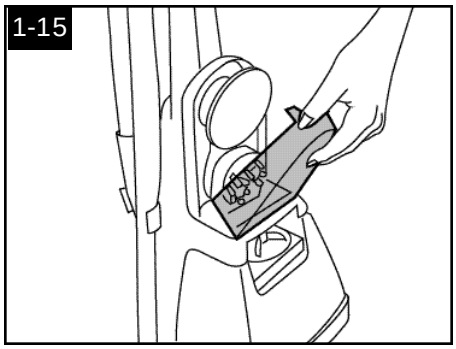

Powered hand tool

The powered hand tool is shipped in a plastic bag for protection. Remove the bag before using the tool by first opening tool door.

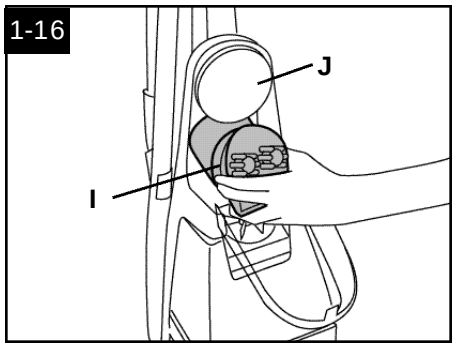

To remove powered hand tool (I), pull it down and outward.
To reposition the tool, reverse this procedure.

To remove the scrub module* (J), grasp it at the sides and pull it forward.
To reposition module, fit tabs in the storage area into holes on back of module. Push module to snap it securely into position.

*included with some models, storage on LS model only

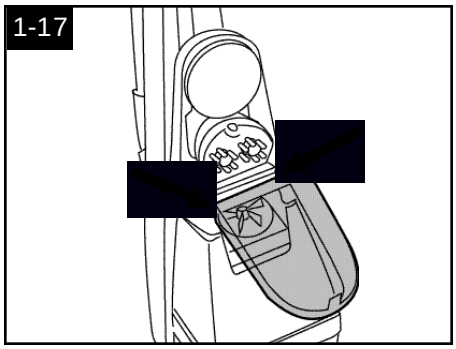

How to reattach tool cover

The tool cover is designed with a breakaway feature which allows it to snap free if it is pushed open too far.

To reattach, align hinges of cover with holes on sides of tool storage area.

2. How to use

Deep Cleaner Description

2-1

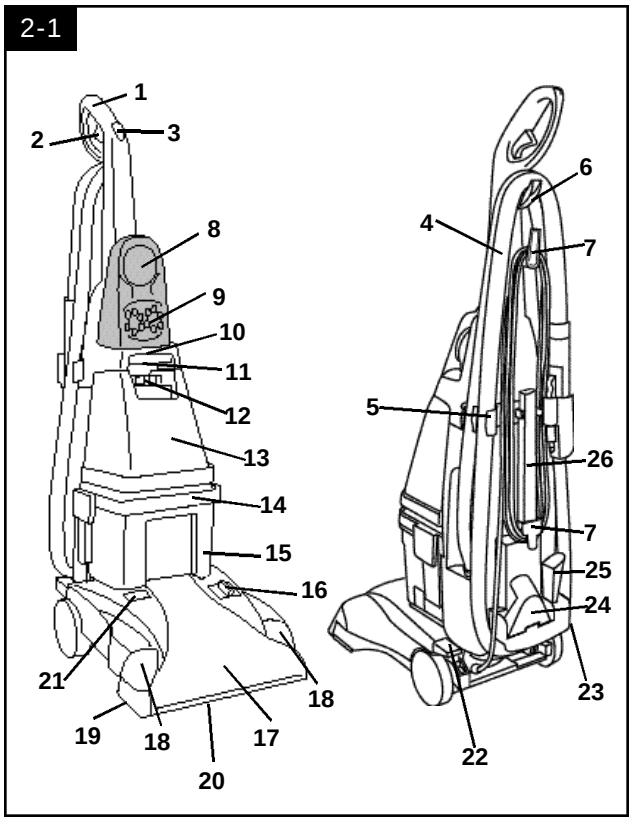

The assembled deep cleaner will look like the drawing.
LS model shown.

1. **Hand grip**
2. **Solution trigger:** press to release clean solution.
3. **Clean Surge™ button***
4. **Hose**
5. **Hose holder:** wrap hose around holder and top hose hook (6) for storage.
6. **Hose hook**
7. **Cord hooks:** wrap cord around hooks for storage. The top hook can be rotated right or left for quick and easy cord release.
8. **Scrub module***
9. **Powered hand tool**
10. **Carrying handle**
11. **Clean solution tank handle**
12. **Clean solution tank cap/ measuring cup**
13. **Clean solution tank:** holds cleaning solution.
14. **Recovery tank handle:** raise handle to unlock tank for removal; lower handle forward to lock tank into position.
15. **Recovery tank:** holds dirty solution.
16. **Brush speed selector:** slide selector to set brush speed on HI, LO, or OFF.
17. **Hood**
18. **Headlight:** on both sides of the hood
19. **Edge bristles:** on both sides of the hood for cleaning close to edges of carpet.
20. **Nozzle**
21. **Cleaning mode indicator:** shows either floor or tool usage
22. **ON/OFF pedal**
23. **Handle release pedal:** step on pedal to lower handle to operating (floor) position;
24. **Stair/upholstery nozzle**
25. **Crevice tool***
26. **Bare floor attachment***

***Included with some models**

This deep cleaner is intended for household use.

Operate deep cleaner only at voltage specified on data plate on back of cleaner.
Plug deep cleaner into a properly grounded outlet.

2-2

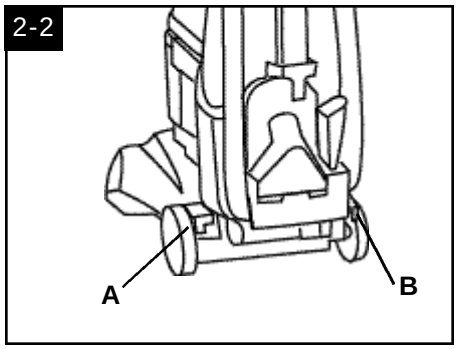

ON/OFF pedal & Handle release pedal

Step on pedal (A) to turn deep cleaner on. Step on pedal again to turn deep cleaner off.

Step on pedal (B) to lower handle to operating position. Handle does not lock into a single position but “floats” to allow convenient operation.

2-3

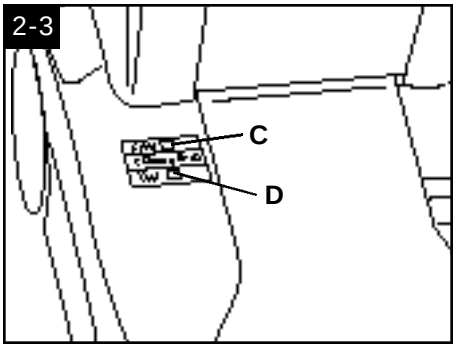

Cleaning mode indicator

Indicator will show a green window next to FLOOR (C) when handle is in the operating position for cleaning carpet rugs and bare floors.

Indicator will show a green window next to TOOL (D) when handle is in the upright position for tool use on stairs, upholstery, etc.

Deep cleaner **automatically diverts suction from FLOOR to TOOL when** handle is raised from the operating to the upright position.

2-4

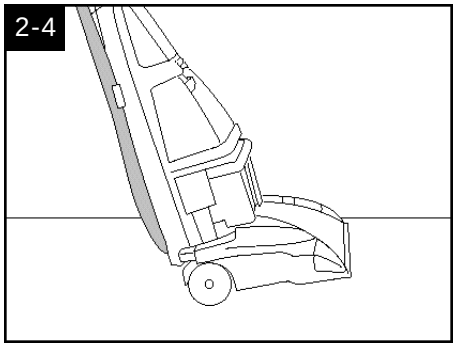

To transport

To move your deep cleaner from room to room put handle in upright and locked position tilt deep cleaner back on wheels and push forward.

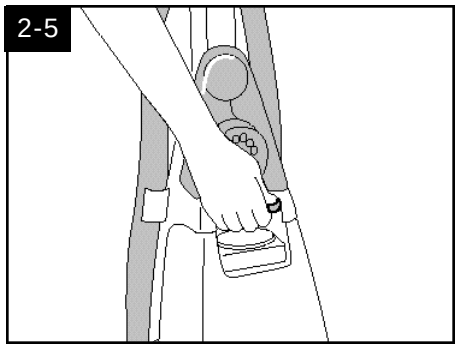

The deep cleaner may also be lifted by placing a hand under the upper clean solution tank handle as shown.

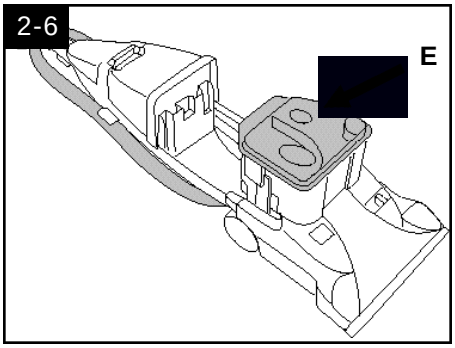

Automatic "shut off"

When the recovery tank (lower tank) is full the automatic shutoff mechanism will shut off the deep cleaner suction **(suction will be noticeably reduced).**

At that time the yellow float disk will rise to the top of the recovery tank lid (E). The deep cleaner will no longer pick up dirty solution and the **motor sound will become noticeably higher in pitch.**

When this happens turn deep cleaner off and empty recovery tank before continuing use.

Check clean solution tank also; it may need to be refilled.

Do not use without float and float retainer in place. If broken or dislodged, take to an Authorized Hoover Service Center or Dealer for repair.

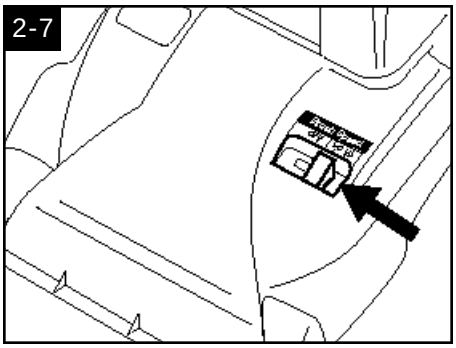

Brush speed selector

Your 'SteamVac' deep cleaner has three agitator brush settings.

HI - for normal cleaning of carpet and bare floors

LO - for gentle cleaning of carpets and bare floors

OFF - for cleaning carpets and bare floors when brushing is not desired. (Such as when picking up liquid spills. See page 10.)

Slide selector button to the desired setting before cleaning.

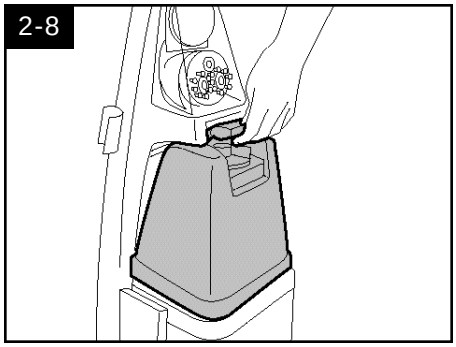

The tanks

Clean solution tank

(upper tank)

The clean solution tank holds the cleaning solution that is to be dispersed onto the surface to be cleaned.

How to fill

Disconnect deep cleaner from electrical outlet.

Place deep cleaner handle in the upright, locked position.

To remove tank, press down on tank handle and pull forward.

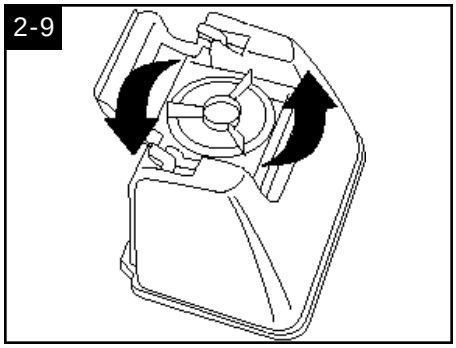

Carry tank to a sink. Rotate tank cap counterclockwise and lift up to remove cap.

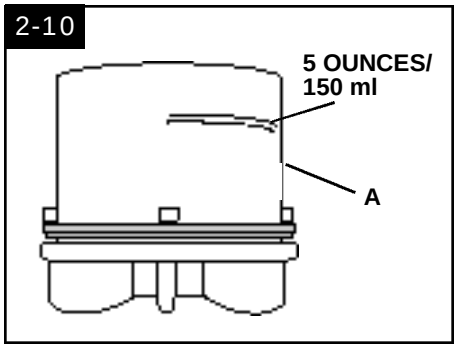

Turn cap (A) upside down to serve as a measuring cup.
Using cap, measure detergent following the chart below.

For heavy traffic areas:

Pre-treat with HOOVER PreCleaner* Spray.

If you do not have access to the PreCleaner Spray, double the amount of HOOVER Detergent (use 2 capfuls or 10 ounces per 1 gallon tank).

*Available at additional cost if not included with your model.

For carpet, carpeted stairs and upholstery:

Fill cap to **fill line** (5 ounces) with HOOVER **Carpet/Upholstery Detergent.**

For bare floors:

Fill cap to **fill line** (5 ounces) with HOOVER **Bare Floor Cleaner***

Do not use Bare Floor Cleaner on carpet or upholstery. **Do not use any type of wax with your 'SteamVac' Widepath deep cleaner.**

Continued ➜

NOTE: Use only HOOVER detergents. They are specially formulated for use with your 'SteamVac' deep cleaner.

CAUTION: Detergents contain Anionic and Nonionic Surfactants. Avoid contact with eyes and skin. In case of contact with eyes, flush with cold water for 15 minutes. In case of contact with skin, wash with water. If Irritation persists, call a physician. For Medical Information (U.S.) call 1-800-752-7869.

2-11

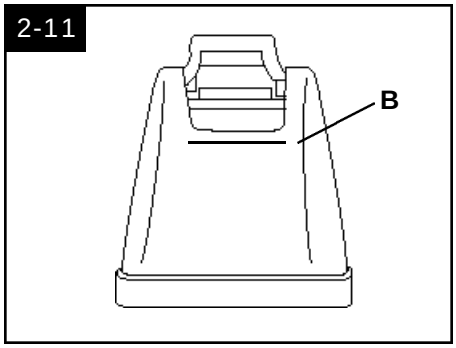

Pour detergent into tank. Fill tank to fill line (B) (1 gallon) with hot tap water.

To assure proper performance, **use only HOOVER cleaning detergent.**

2-12

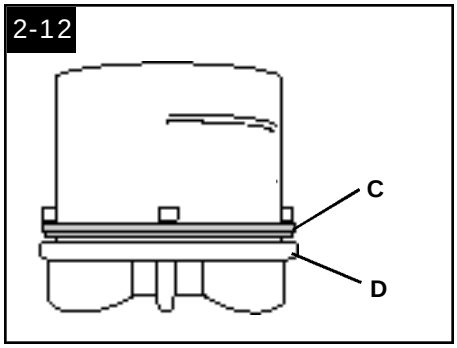

If rubber ring (C) on cap has become dislodged, reposition it with uneven side against ledge (D) as shown.

2-13

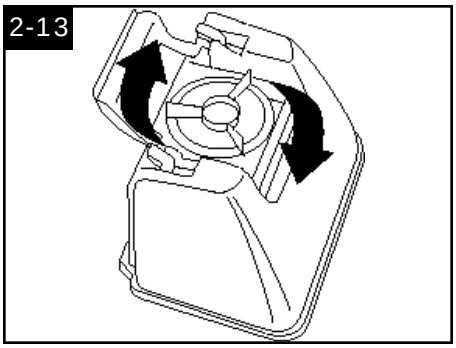

Replace cap. **Rotate cap clockwise until it locks In place. Cap must be locked In place for proper performance and to prevent leaking.**

2-14

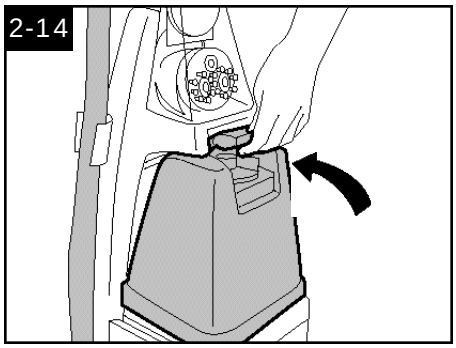

Position bottom of tank into unit and press on tank handle to snap tank into place.

Recovery tank

(lower tank)

The recovery tank holds the dirty solution that is picked up from the carpet.

When the recovery tank is full, the automatic shut-off will engage (see page 7) and the tank must be emptied.

How to empty

Turn deep cleaner off and disconnect from electrical outlet.

To prevent possible leaking, remove clean solution tank (Fig.2-8) by pressing down on tank handle and pulling forward; set tank aside **(do not set tank on furniture).**

Step on handle release pedal (Fig. 2-2) and lower handle until it rests on the floor.

2-15

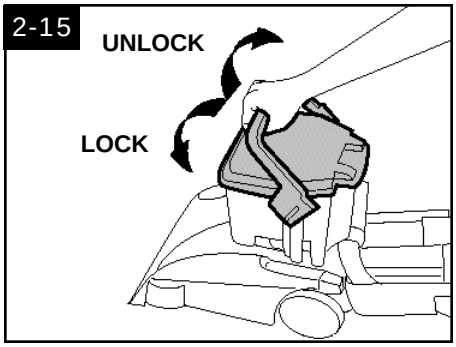

Raise handle to carrying position (straight up) to **unlock tank** from base of deep cleaner. Lift tank from deep cleaner and carry it to a sink or drain.

2-16

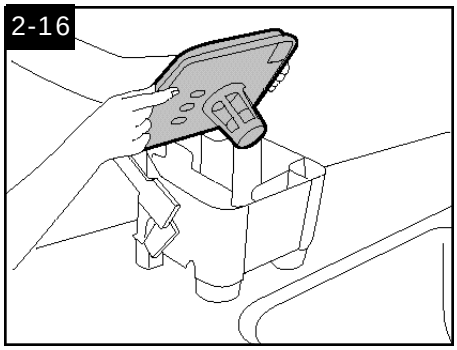

To remove tank lid, lower handle completely toward back of tank and lift off lid.

Empty the tank and reposition the lid.

For full suction, it is important that the recovery tank lid is properly secured before cleaning.

Raise tank handle to carrying position to place it into base of deep cleaner. Move handle completely forward to **lock tank** into place (see Fig. 2-15).

Raise handle of deep cleaner to upright position and reposition upper clean solution tank.

3. How to clean

Before you begin cleaning

a. Vacuum thoroughly - For carpet, use a HOOVER vacuum cleaner with an agitator for best results. Vacuum upholstery with a vacuum cleaner with cleaning tool attachments. Use a crevice tool to reach into tufts and folds. **Do not use the 'SteamVac'deep cleaner as a dry vacuum cleaner.**

b. For upholstery, check cleaning code - Use your HOOVER 'SteamVac' 'Widepath' deep cleaner only if the upholstery fabric is marked with a "W" (for "wet" clean) or "S/W" (for "solvent/dry" or "wet" clean). **Do not clean fabric marked "S" ("solvent/dry" clean only).** If your upholstery does not have a code, seek professional assistance.

c. Test for colorfastness - Mix detergent and water according to the instructions under "Fill clean solution tank", Figs. 2-8 to 2--14. Wet a white absorbent cloth with the solution. In a small, hidden area, gently rub the surface with the dampened cloth. Wait ten minutes and check for color removal or bleed with white paper towel or cloth. If surface has more than one color, check all colors.

d. When cleaning entire floor, move furniture out of area to be cleaned (may not be necessary if only high traffic areas are to be cleaned). For furniture too heavy to move, place aluminum foil or wax paper under legs. This will prevent wood finishes from staining carpet. Pin up furniture skirts and draperies.

e. Pretreat spots and heavy traffic areas with HOOVER® PreCleaner*- Test PreCleaner for colorfastness by first spraying it on a hidden area; wait ten minutes and blot with white paper towels or cloth.
If no color change is visible, spray PreCleaner onto spots and traffic areas. Wait at least ten minutes. Use your 'SteamVac' 'Widepath' deep cleaner to pick up PreCleaner and spot. Repeat until spot is removed; carefully scrub with a household scrub brush if necessary.

Do not saturate carpet or upholstery with PreCleaner.

If you do not have access to the PreCleaner Spray, double the amount of HOOVER Detergent (use 2 capfuls or 10 oz. per 1 gallon) in the clean solution tank.

No cleaning solution removes all stains from all carpets. Stain removal varies with the type of spill, time elapsed before removal, carpet material, and carpet type.

f. To prevent staining, use plastic or aluminum foil to protect wood or metal surfaces from possible water spray.

g. To avoid wetting and possible damage to wood floors underneath area rugs/carpet, either move area rugs/ carpet to a non-wood bare floor surface or place waterproof material (e.g. plastic) underneath them before cleaning.

*Available at additional cost if not included with your model.

See pages 10-13 for instructions on various cleaning tasks.

After cleaning

a. Allow carpet or upholstery to dry. To help prevent matting and resoiling the carpet, keep children and pets away from surface until it **is completely dry. If it is necessary to walk on damp** carpet, place towels or white cloths on the traffic areas.

If furniture must be replaced before the carpet is dry, place plastic or aluminum foil under legs of furniture so metal slides or wood finishes will not stain the carpet.

b. If desired, the carpet may be rinsed. **Rinsing is not necessary for cleaning,** but it may improve the surface's appearance after it is dry.

If rinsing is desired, be careful not to over-wet the carpet or upholstery. **Allow time for carpet or upholstery to dry completely between cleaning and rinsing.** To rinse, follow the same procedure for cleaning only using hot tap water with no detergent in the upper clean solution tank.

c. Empty tanks, rinse with clear water and let air dry. Rinse the solution tank cap and recovery tank lid and let air dry.

3-1

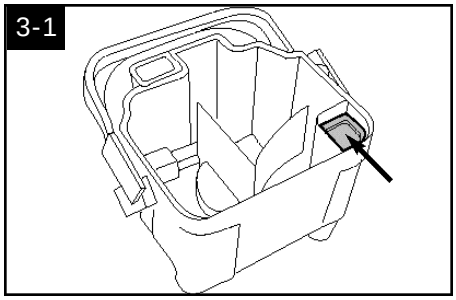

d. Remove lint from filter screen located inside recovery tank.

3-2

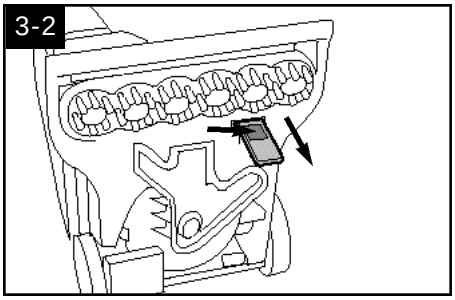

e. Remove lint from filter screen located on bottom of cleaner as follows. **Note: When brushes seem to be rotating slowly, disconnect deep cleaner from electical outlet and check and clean this screen.**

Tilt cleaner back so handle rests on floor.

Squeeze frame, lift and pull it out. Wipe off screen and push frame back into place.

Return cleaner to upright position.

f. If desired, vacuum thoroughly after carpet has completely dried. This will help reduce any shading left by the deep cleaner's brushes.

To clean nozzle

If lint or other debris becomes lodged in **nozzle, do not attempt to remove nozzle cover.**

Pour one to two cups of clear water on a non-carpeted floor. **Do not pour water onto a wood floor.**

Pick up the water with your deep cleaner. Repeat as necessary until debris is flushed out of nozzle.

3-3

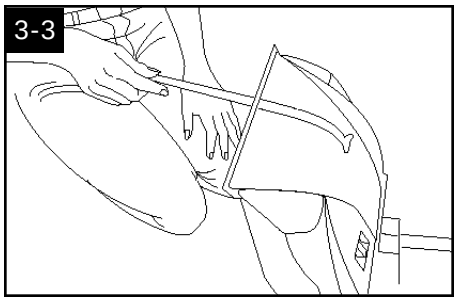

Some models have a nozzle clean-out tool for removing debris or if a non-carpeted floor is not available. To use the tool:

Disconnect deep cleaner from electrical outlet.

Slide tool into nozzle and remove debris as shown.

Continued ➜

To clean the outside of the machine, wipe off dirt with a cloth dampened in warm water and mild detergent. **Do not use solvent or petroleum based products to clean the machine.**

Carpet Cleaning

Read "Before you begin cleaning" instructions on page 9.

1. Fill clean solution tank (upper tank) with HOOVER Carpet/Upholstery Detergent according to instructions for Figs. 2-8 to 2-14.

2. Move speed selector to LO for gentle cleaning or HI for normal cleaning.

3. Dry hands and plug cord into a **properly grounded outlet.**

Do not clean over floor electrical outlets.

4. To avoid walking on damp carpet, start at the end of the room farthest from the door or path to sink where tanks will be emptied and filled.

Step on handle release pedal and lower handle to operating position; turn deep cleaner ON.

3-4

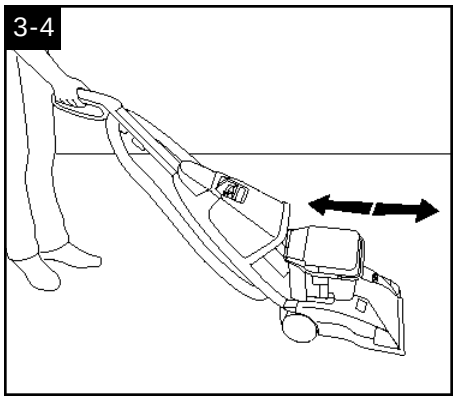

5. Squeeze trigger to release cleaning solution and **slowly** push deep cleaner forward (equals one wet stroke).

6. Continue to squeeze trigger and **slowly** pull deep cleaner back toward you (second wet stroke). Release trigger and slowly push deep cleaner forward over area just sprayed with solution (dry stroke). Then **slowly** pull deep cleaner back toward you without squeezing trigger (dry stroke).

7. Overlap strokes by 1 inch to help prevent streaking.

Keep nozzle flat on floor for both forward and reverse strokes.

8. For heavily soiled areas, repeat steps 5-7. Avoid saturating carpet, as noted below.

9. For particularly soiled carpet or spots, use the Clean Surge™ button (see following section). Avoid saturating carpet, as noted below.

Note: To avoid saturating carpet, do not use more than 4 wet strokes over one area. Always end with dry strokes.

It is best to alternate wet and dry strokes as described above.

For best cleaning results and to aid in faster drying of carpet, end with more dry strokes. (Continue using dry strokes until little water is visible passing through the recovery tank lid.)
Empty recovery tank when the motor sound becomes higher pitched and there is a loss in suction (see "Automatic shut-off", Fig. 2-6)

When finished cleaning, follow "After cleaning" instructions on pages 9.

3-5

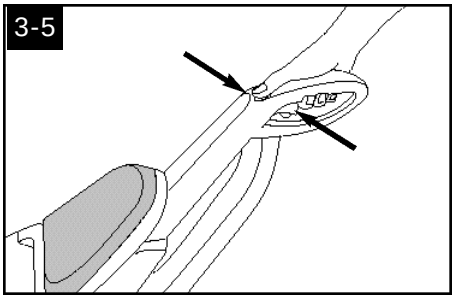

Clean Surge™ Button **(some models)**

The 'Clean Surge' button can be used to dispense extra solution when cleaning particularly soiled areas of carpet or spots.

To use, press 'Clean Surge' button while squeezing solution trigger. For normal solution spray, release button and continue to squeeze solution trigger.

Picking up spills

Your deep cleaner may also be used to pick up **small liquid spills (1 gallon or less, never to exceed 1/4 inch in depth)** on carpet, upholstery, or bare floors.

1. For best results, pick up spills immediately by placing the stair/upholstery nozzle just above the spill and suction up any residue on top of the carpet.

2. If the spill remains, place either the stair/ upholstery nozzle or floor nozzle *with brushes turned OFF in* front of the spill, pull the nozzle very slowly over the spill initially with suction only.

Repeat with spray and suction.

When picking up spills on bare floors, use only the floor nozzle with the bare floor attachment (some models) in place and speed selector in the OFF position (this will help prevent spreading the spill).

If a spot is left, the stair/upholstery nozzle is generally more effective for removing it.

Although no cleaning solution can completely remove all spots, they can be treated by following the instructions provided by the manufacturer of the carpet, upholstery, or bare floor surface being cleaned.

Do not use the deep cleaner to pick up flammable or combustible liquids or chemicals.

When finished, follow "After cleaning" instructions on pages 9.

Cleaning bare floors

How to attach bare floor attachment **(some models)**

Disconnect deep cleaner from electrical outlet.

To prevent possible leaking, remove clean solution tank (Fig. 2-8) and recovery tank (Fig. 2-15) before positioning bare floor attachment.
Set tanks aside (do not set tank on furniture).

1. With handle in upright position, tilt cleaner back so that handle rests on the floor.

3-6

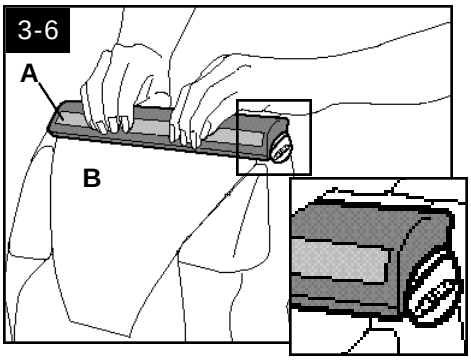

2. With foam strip (A) (located under the netting) in position as shown, place attachment on front of nozzle (B).

Make sure arrow on end of attachment points in the direction as shown.

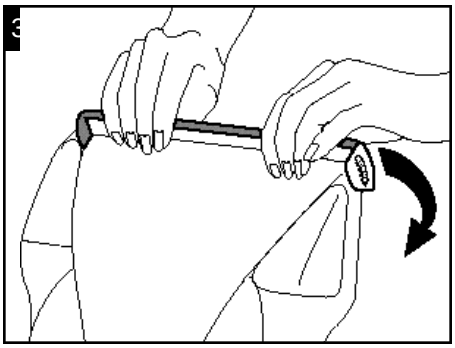

3. Push attachment against nozzle while rotating attachment downward until both ends snap into place.

(Note: Some force may be required to rotate and snap attachment into place.)

4. Return deep cleaner to upright position. Lower handle and replace recovery tank.

5. Raise handle to upright position and reposition clean solution tank.

To clean floor

Read "Before you begin cleaning" instructions on page 9.

Do not use the deep cleaner on hardwood floors.

1. Fill clean solution tank with HOOVER Bare Floor Cleaner* according to instructions for Figs. 2-8 to 2-14.

Do not use any type of wax with your deep cleaner.

2. Move speed selector to the Lo or Hl position for scrubbing or OFF if scrubbing is not desired.

3. Dry hands and **plug deep cleaner into a properly grounded outlet.**

4. Step on handle release pedal and lower handle to operating position; turn deep cleaner ON.

5. To release solution, press trigger. Slowly move deep cleaner forward and backward over area to be cleaned.

6. To pick up dirty solution, release trigger and slowly move deep cleaner over area where solution has just been dispersed. Use both forward and reverse strokes.

7. Empty recovery tank when the motor sound becomes higher pitched and there is a loss in suction (see "Automatic shut-off", Fig.2-6)

8. When finished cleaning, follow "After cleaning" instructions on pages 9-10.

Disconnect deep cleaner from electrical outlet and remove attachment from nozzle. Rinse it in clear water. **Do not remove plastic screen or foam from attachment.**

*available at additional cost if not included with your model

Using the tools

Your model includes some combination of the following tools.

A. Powered hand tool has rotating brushes for extra scrubbing action on small carpet areas, carpeted stairs and upholstery. For some models, the brushes can be removed for converting to the scrub module.

3-8

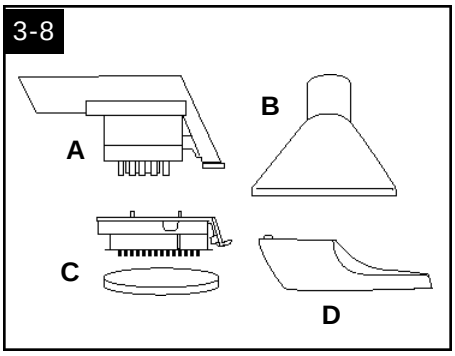

B. Stair/upholstery nozzle has a built-in brush to help provide the scrubbing action some spots may need for removal.

C. Scrub module with detachable scrub pad* attaches to the base of the powered hand tool (in place of brush module). Can be used to scrub stubborn areas such as scuff marks, dried spills, and in hard to reach areas on hard surfaces.

D. Crevice tool* can be used to clean along edges of carpet, carpeted stairs and on upholstery.

*some models

3-9

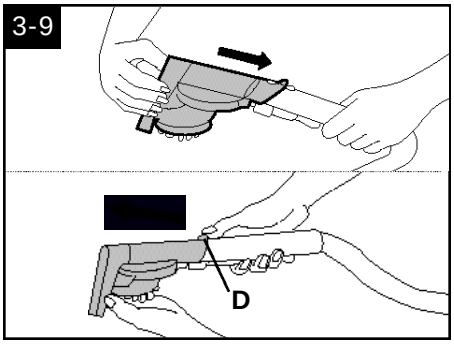

How to attach tools

Disconnect deep cleaner from electrical outlet.

1. Place handle in upright position and remove hose from rack.

All tools attach to the hose in the same manner:

2. Connect tool to hose by sliding it onto connector until the tab (C) locks it securely.

Using your thumb, **push forward and up** on the **latch (D)** to remove tool as shown.

Before using tool

It may be necessary to remove air from the system ("prime the pump") so the clean solution will flow to the tool. Follow these steps:

1. Attach tool to hose and turn the deep cleaner ON.

2. Put the tool on a hard surface or against your hand to block off the suction.

3. Wait a few seconds (can take up to 15 seconds). Then squeeze the trigger and begin cleaning.

Follow the instructions on pages 12-13 for the appropriate cleaning task.

3-10

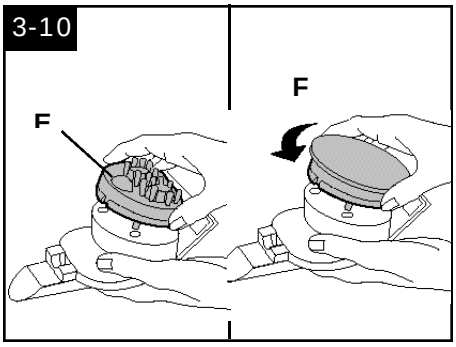

Attaching scrub module*

1. Open the tool door and remove the powered hand tool.

2. Grasp the sides of the brush module and lift it from the base (E).

3. Pull scrub module from deep cleaner and snap it onto the base.

Note: It may be necessary to rotate the scrub module (F) slightly so it will align properly to the base.

3-11

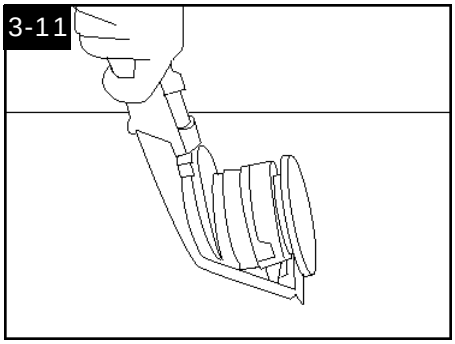

Using the scrub tool

With a little solution, test the scrub tool on a hidden area before using on the desired surface. If no surface change is visible, continue to use as described below.

1. Fill clean solution tank with HOOVER Bare Floor Cleaner* according to instructions for Figs. 2-8 to 2-14.

2. Hold scrub tool above area to be cleaned and press trigger to dispense solution.

3. Release trigger and scrub area with tool. Pick up dirty solution with squeegee as shown.

*included with some models

Continued ➜

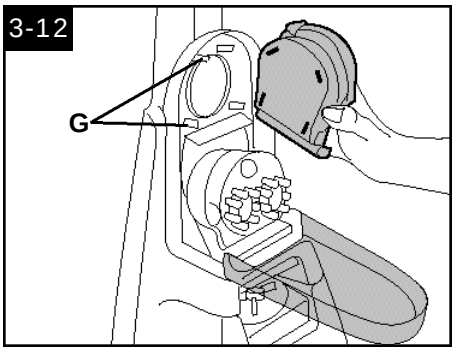

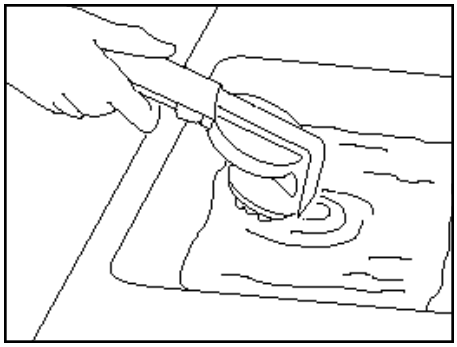

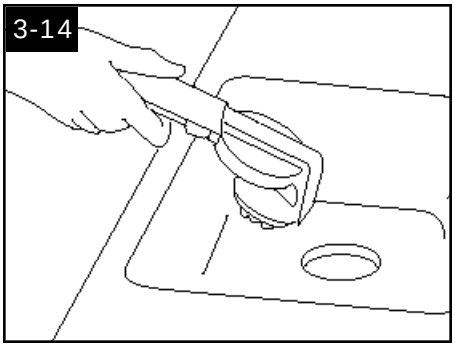

After using scrub tool

To clean scrub pad, pull it off module. Wash it in water with mild detergent. Rinse and let air dry.

Pad must be completely dry before reattaching to module and storing on deep cleaner.

Replacement pads may also be purchased. Ask for **HOOVER part no. 40308001.**

To store scub module, remove scrub module from tool in same manner as removing the brush module.

Align openings on back of module with tabs in storage area (G).

Push module into position.

After using tool

1. Follow steps a and b for “After cleaning” on page 9.

2. Rinse tool and hose by filling sink with a small amount of water. Turn deep cleaner ON and pickup the water with the tool.

3. Drain hose by turning deep cleaner ON and holding end of hose up for several seconds. Do not press trigger.

4. Disconnect deep cleaner from electrical outlet.

5. Drain solution tube (located inside hose) by pointing end of hose in sink and pressing trigger.

6. Proceed with steps c, d, and e, for “After cleaning” on page 9.

Cleaning carpeted stairs

Read “Before you begin cleaning” instructions on page 9.

1. Place handle in upright position. **Agitator brushes will not rotate while handle is in upright position.**

2. Fill clean solution tank with HOOVER Carpet/Upholstery Detergent according to instructions for Figs. 2-8 to 2-14.

3. Attach tool to end of hose.

4. Hose length may require that machine be placed at the top of the stairs to clean upper half of stairway and at bottom of stairs to clean lower half.

To prevent machine from falling, use extra caution when cleaning on stairs.

Do not place deep cleaner on stairs.

Do not point tools toward people or pets.

5. Dry hands and plug deep cleaner into a **properly grounded outlet.**

6. Turn deep cleaner ON. If necessary, refer to “Before using tool” section to remove air from the system.

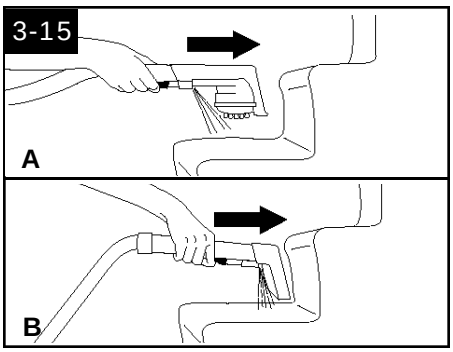

7. Pre-spray the carpeted stair by holding the tool (A) or (B) about one inch above the carpet and push it forward while pressing the trigger (equals one wet stroke).

8. Position tool against the riser and slightly press it into carpet pile. Press the trigger and pull the tool **slowly** over the carpet (second wet stroke). Release trigger at end of stroke.

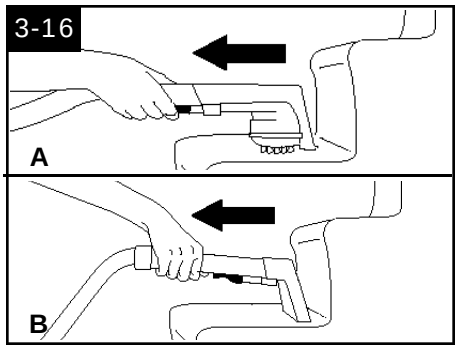

9. Lift tool, and position it against riser. Pull tool **slowly** over carpet without pressing trigger (dry stroke).

It is best to alternate wet and dry strokes as described above. End with more dry strokes to aid in faster drying of carpet.

10. Overlap strokes by 1/2 inch to help prevent streaking.

To avoid saturating carpet, do not use more than 4 wet strokes over any one area. Always end with dry strokes.

If additional cleaning is necessary, wait until the carpet is completely dry before using the tool again.

11. Empty recovery tank when the motor sound becomes higher pitched and there is a loss in suction (see “Automatic shut-off”, Fig. 2-6).

When finished cleaning, follow “After cleaning” instructions on page 9 and “After using tool” instructions on page 12.

Cleaning upholstery

Read "Before you begin cleaning" instructions on page 9.

Be sure to check the cleaning code on your upholstery. **Use your deep cleaner only on upholstery marked "W"or "W/S".**

1. Place handle in upright position. **Agitator brushes will not rotate while handle is in upright position.**

2. Fill clean solution tank with HOOVER Carpet/Upholstery Detergent according to instructions for Figs. 2a-8 to 2-14.

3. Attach tool to end of hose.

Do not point tools toward people or pets.

4. Dry hands and plug deep cleaner into a **properly grounded outlet**.

5. Turn deep cleaner ON. If necessary, refer to "Before using tool" section to remove air from the system.

6. Gently press the tool onto the fabric.

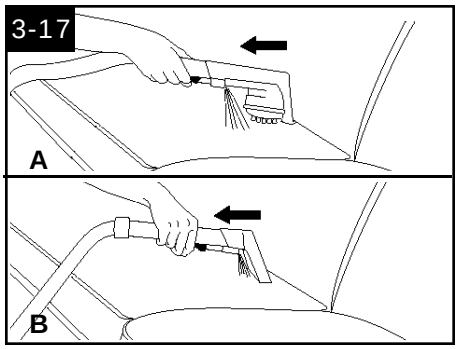

Press the trigger and slowly pull the nozzle over the fabric.

7. Overlap strokes by 1/2 inch to help prevent streaking.

Make additional strokes without pressing the trigger to remove more moisture.

8. To clean in corners or creases, lift the tool one-half inch from the fabric and press the solution trigger. The crevice tool (included in some models) is very useful for this task.

9.Vacuum up the solution with the tool without pressing the trigger.

10. For heavily soiled areas, it may be

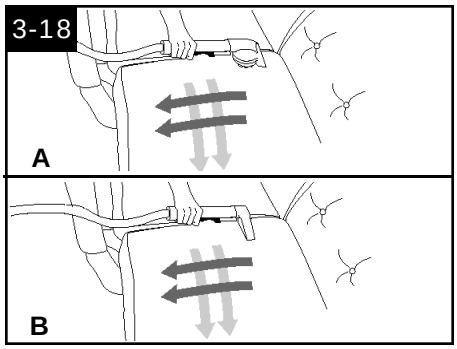

necessary to repeat the cleaning process. Make crisscrossing strokes to the original pattern; overlap each pass.

Make no more than 2 passes with the solution over any one area to prevent over-wetting and damage to fabric.

If additional cleaning is necessary, wait until the upholstery is completely dry before using the tool again.

11. Empty recovery tank when the motor sound becomes higher pitched and there is a loss in suction (see "Automatic shut-off", Fig. 2-6).

When finished cleaning, follow "After cleaning" instructions on page 9 and "After using tool" instructions on page 12.

4. Maintenance

Headlight replacement

What to buy

The deep cleaner uses a 7 volt, wedge base type bulb, **HOOVER part no. 27313106.**

Where to buy

Bulbs may be purchased from authorized Hoover dealers (Depot), Hoover Factory Service Centers, or through The Hoover Company online at www.hoover.com

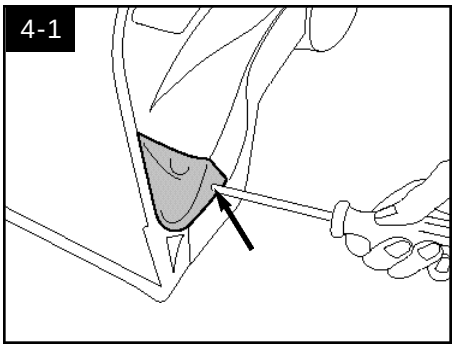

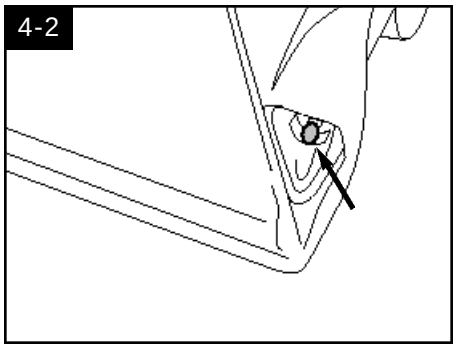

How to replace

Turn cleaner off and with dry hands, disconnect deep cleaner from electrical outlet.

1. Using a Phillips screwdriver, remove the screw as shown and lift off lens.

2. Pull old bulb straight out of socket.

3. Push new bulb straight into socket until locked into place.

Excessive force is not required.

Reposition lens and secure with screw.

Removable brushes

Your deep cleaner is equipped with removable brushes for easy cleaning.

To remove brushes

Disconnect cleaner from electrical outlet.

To prevent possible leaking, remove clean solution tank and recovery tank. Set tanks aside.

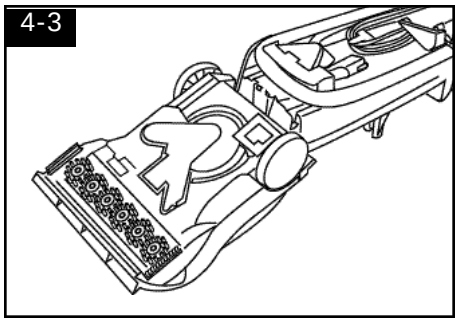

Press handle release pedal to lower handle. Turn cleaner over so bottom is facing up.

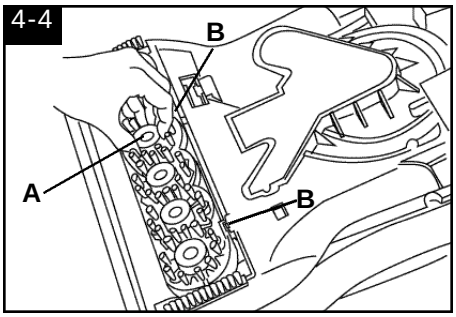

Grasp inner portion of brush (A) and pull brush assembly out slightly to reveal latches (B).

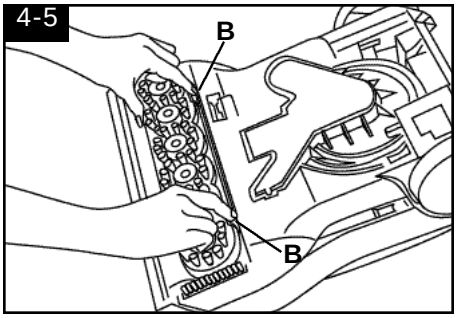

Press both latches (B) and pull brush block out. The brushes can be cleaned under running water.

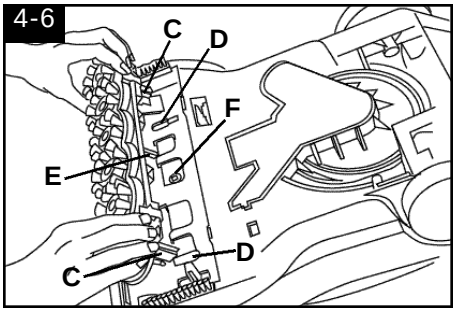

To replace brushes

Align posts (C) on both ends of brush assembly with slots (D) in cleaner housing.

Make sure that the square post (E) also aligns with the square hole (F). Turn brushes slightly until post fits easily into hole.

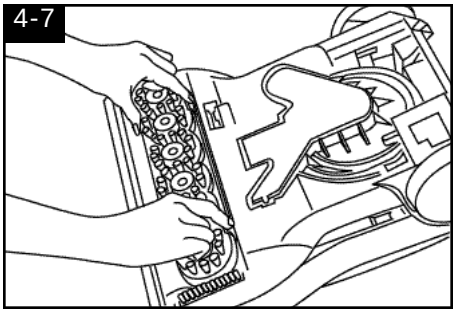

Press brush firmly to snap into place.

Storage

Before storing:

- Empty solution tank and rinse thoroughly with clean water.
- Replace **empty** solution tank and turn deep cleaner ON. Squeeze trigger and push deep cleaner forward and back several times to expel any solution remaining in the deep cleaner's system. (Do not use deep cleaner on wood floors.)
- Empty recovery tank and rinse thoroughly with clean water.

Allow brushes and underside of deep cleaner to air dry thoroughly before storing deep cleaner on a carpeted or wood surface.

Do not store deep cleaner with a full solution tank in place.

Lubrication

The motor is equipped with bearings which contain sufficient lubrication for the life of the motor. The addition of lubricant could cause damage. **Do not add lubricant to motor bearings.**

4. If you have a problem

If a minor problem occurs, it usually can be solved quite easily when the cause is found by using the check list below.

Problem: Machine won't run

Possible cause
Possible solution

- **Not firmly plugged in**
- *Plug unit in firmly*
- **No voltage in wall plug**
- *Check fuse or breaker*
- **Blown fuse/tripped breaker**
- *Replace fuse/reset breaker*

Problem: Low suction

Possible cause
Possible solution

- **Recovery tank full/automatic shut off engaged**
- *Remove and empty recovery tank*
- **Blockage in tool on end of hose**
- *Remove tool and clear blockage*
- **Recovery tank lid not on correctly**
- *Make sure lid is on securely*

Problem: Clean solution won't dispense

Possible cause
Possible solution

- **Solution tank not firmly in place**
- *Make sure tank is securely locked in position*
- **Solution tank empty**
- *Refill tank according to instructions for surface being cleaned*
- **Recovery tank lid not on correctly**
- *Make sure lid is firmly in place*
- **Pump needs to be "primed"(when using tool)**
- *See "Before using tool" section, p.11*

Problem: Brushes won't rotate during floor cleaning

Possible cause
Possible solution

- **Dirty filter screen on bottom of unit**
- *Clean screen as shown in Fig. 3-2*
- **Speed selector on OFF**
- *Move speed selector to Low or Hi*

Service

To obtain approved HOOVER service and genuine HOOVER parts, locate the nearest **Hoover Factory Service Center or Authorized Hoover Warranty Service Dealer (Depot)** by:

- checking the Yellow Pages under Vacuum Cleaners - Household" OR
- checking the list of Factory Service Centers provided with this cleaner OR -
- calling **1-800-944-9200** for an automated referral of authorized service outlet locations (U.S. only) OR-
- checking the Service section of The Hoover Company on-line at **www.hoover.com**

Do not send your cleaner to The Hoover Company in North Canton for service, this will only result in delay.

If further assistance is needed, contact The Hoover Company Consumer Response Center, North Canton, Ohio 44720 Phone: 330-499-9499.

In Canada, contact Hoover Canada, Burlington, Ontario L7R 4A8, Phone: 1-800-263-6376.

Always identify your cleaner by the **complete** model number when requesting information or ordering parts. (The model number appears on the bottom of the cleaner.)

Full One Year Warranty **(Domestic Use)**

Your HOOVER® appliance is warranted in normal household use, in accordance with the Owner's Manual against original defects in material and workmanship for a period of one full year from date of purchase. This warranty provides, at no cost to you, all labor and parts to place this appliance in correct operating condition during the warranted period. This warranty applies when the appliance is purchased in the United States including its territories and possessions, or in Canada or from a U. S. Military Exchange. Appliances purchased elsewhere are covered by a limited one year warranty which covers the cost of parts only. This warranty does not apply if the appliance is used in a commercial or rental application.

Warranty service can only be obtained by presenting the appliance to one of the following authorized warranty service outlets. Proof of purchase will be required before service is rendered.

1. Hoover Factory Service Centers.
2. Hoover Authorized Warranty Service Dealers (Depots).

For an automated referral of authorized service outlets in the U.S.A., phone 1-800-944-9200 OR

visit The Hoover Company on-line at www.hoover.com

This warranty does not cover pick up delivery, or house calls; however, if you mail your appliance to a Hoover Factory Service Center for warranty service, transportation will be paid one way.

While this warranty gives you specific legal rights, you may also have other rights which vary from state to state.

If further assistance is needed, or if there are questions concerning this warranty or the availability of warranty service outlets, write or phone the Consumer Response Center, The Hoover Company, 101 East Maple St., North Canton, Ohio 44720, Phone 1-330-499-9499.

In Canada, contact Hoover Canada, Burlington, Ontario L7R 4A8, 1-800-263-6376.